ADDQ

Roof support
Dachkonsole
Support au toit
Dakondersteuning

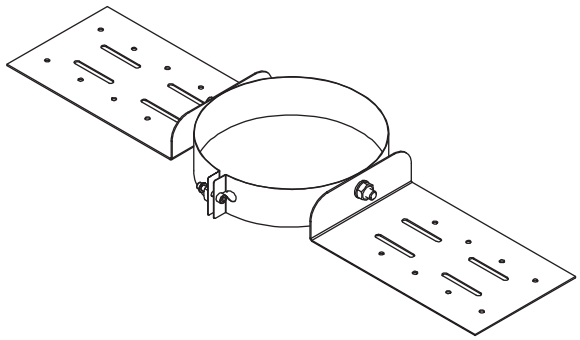

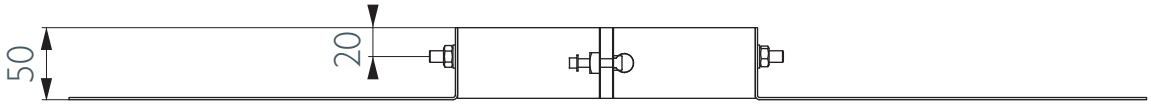

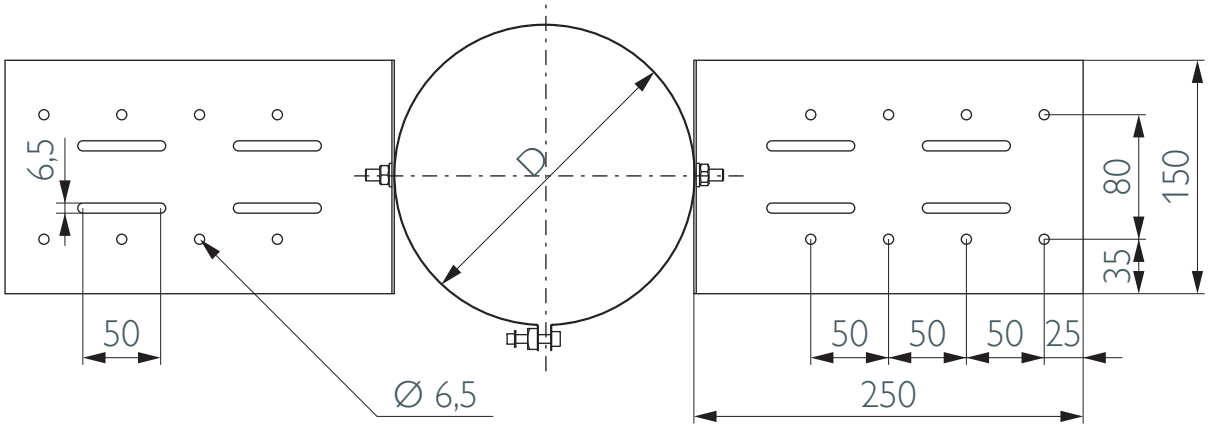

Ø	130	150	180	200	250	300	350	400	450	500	600
D	205	225	255	275	325	375	425	475	525	575	675
SAPcode	164542	164543	164544	164545	164546	158904	158905	158906	158907	158908	158909

SCHIEDEL METALOTERM

A standard INDUSTRIES COMPANY